Lab 1 DC Circuits

Objectives:

- Learn to use a digital multimeter.
- Construct simple DC circuits and compare experimental measurements with the values predicted by theoretical analysis.
- Measure the I-V characteristic curve of a non-linear element (a diode).

I. Pay attention while the instructor explains the operation of the digital multi-meter (DMM) and the powered breadboard. Then perform the following operations and record the results.

1. Use the DMM to measure the output voltage of the nominal 5 V DC supply on the powered breadboard.
2. Measure the output range of the variable positive and negative DC supplies on the powered breadboard. Compare the measured range to the values printed on the case.
3. Borrow another team's DMM and work together on this part. Set one DMM in DC voltage measurement mode, then set the other in resistance measuring mode, then hook them together (common to common, V/Ω to V/Ω). What resistance does the meter read? What does this imply?
4. Obtain two 1 MΩ 1% resistors. Connect them in series with the 5 V DC supply (like a voltage divider) and measure the voltage difference between the point where the two resistors are connected and ground. Compare this to the value you calculate based on the nominal resistor values (assumed to have 1% uncertainty). Explain any discrepancy you find in light of your result in part 3.

II. Using ¼ W resistors supplied by your instructor, the onboard 5 V DC supply, and the separate variable DC supply, construct the circuit shown below on the breadboard.

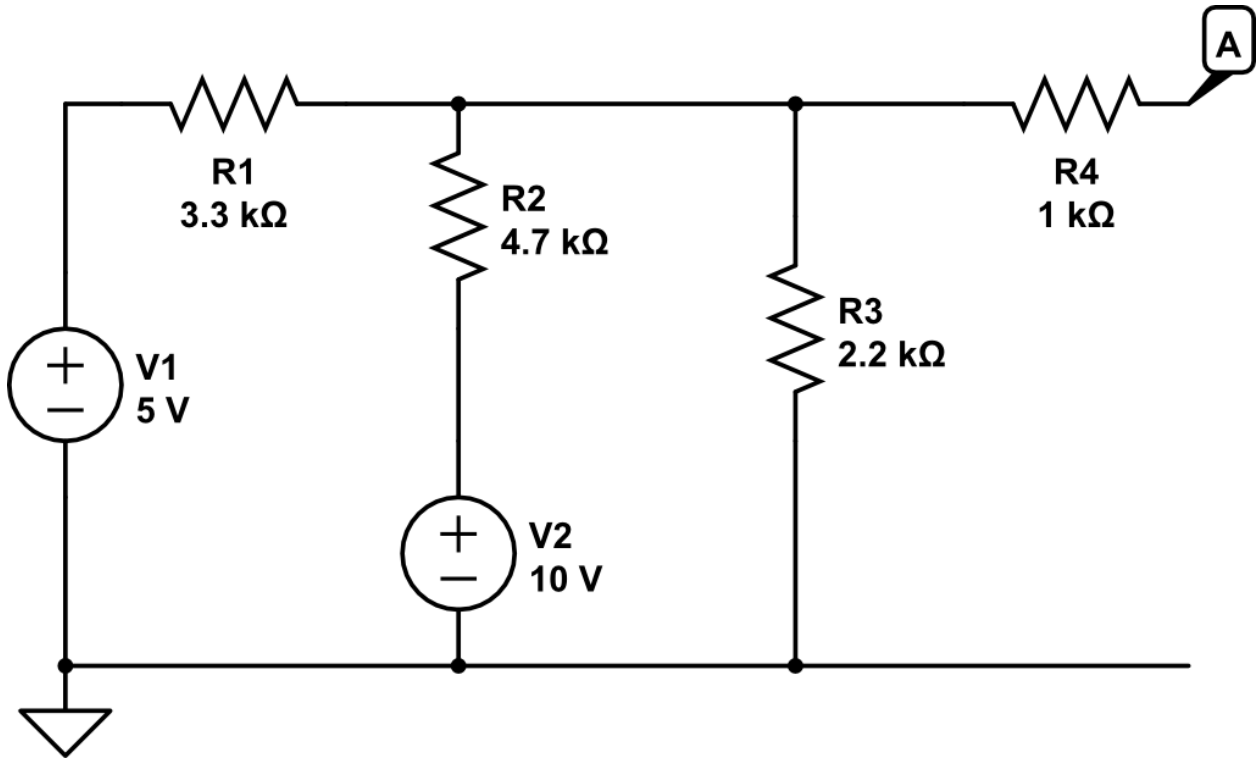

1. Measure the voltage (with respect to ground) at node A. This is V_{oc}, the open circuit voltage, which is equal to the Thevenin voltage for the circuit. Verify this value analytically using your favorite method.
2. Measure the voltage at the node at the top of R2. Verify this value analytically using the method of nodes.
3. Using your DMM as an ammeter (use the lowest current range setting), measure the mesh currents in each mesh and verify their values using mesh analysis.
4. Remove the ammeter. Remove each power supply in turn (replace it with a wire AFTER you remove the power supply connections) and measure the voltage at node A produced by each individual source. Add the voltages to verify that superposition gives the correct V_{oc}.
5. Remove both power supplies (replace each with a wire) and use your multimeter to measure the Thevenin resistance. Verify this value by reducing the series and parallel combinations to a single equivalent resistance.
6. Replace the power supplies and connect a load resistor between node A and ground, measuring the resulting voltage across the load resistor. Use three values of R_{load}: 1 kΩ, 10 kΩ, and 1 MΩ. Using your Thevenin equivalent circuit, verify these measured values analytically.

III. Using the 1N914 silicon diode supplied by your instructor, construct the circuit below using the stand-alone DC power supply.

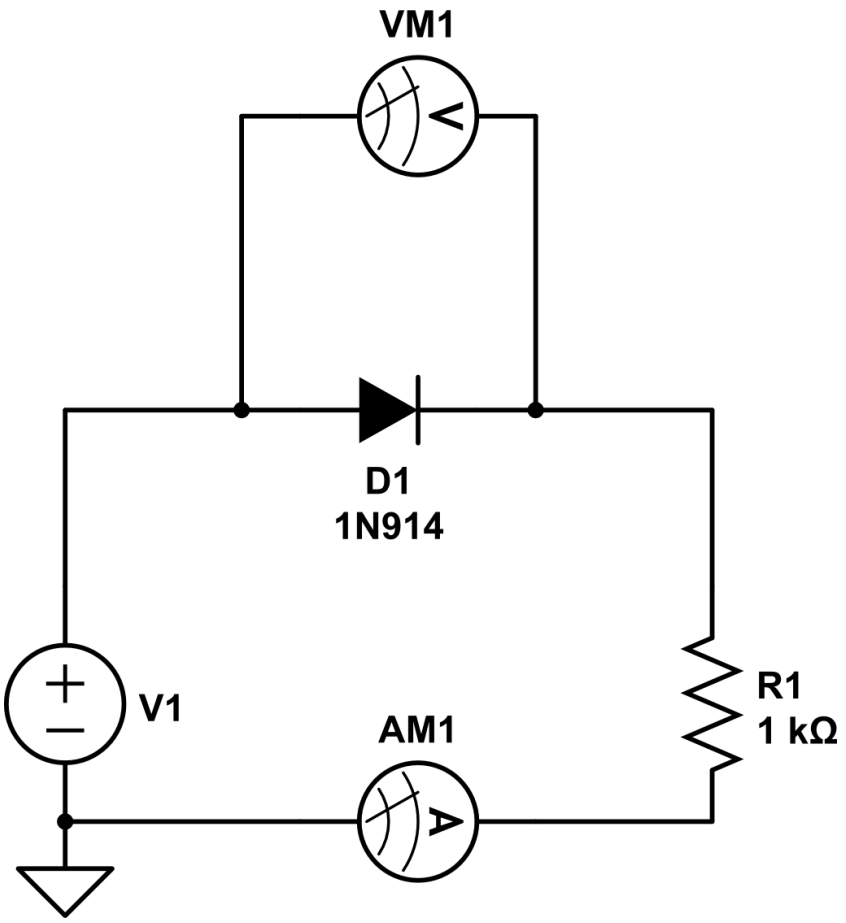

1. Vary the voltage from the power supply and measure the voltage V across the diode and the current I through the diode. Take plenty of data points, but stop when you get to a current of 10 mA. Make sure to include current values over the whole range of allowed values.
2. Make a clearly labeled plot of I vs. V (called the I-V curve).
3. Find the simple analytical form that best fits your data. It will have four adjustable parameters.

IV. Write a clear, concise report describing what you did, what you found, and your analysis of your results.