Lab 5 Diode Circuits

Objectives:

- Understand the behavior of a common Si diode.
- Construct simple diode circuits and be able to explain their behavior.
- Build and understand diode rectifier circuits and use a capacitor filter to reduce the ripple in the output.

I. Using the fixed 5V supply on the powered breadboard and the 1N914 diode provided, construct the circuit shown below. Using the DMM, measure the voltage drop across the diode. Then change the resistor to 100 Ω and repeat the measurement. Then reverse the diode, change the resistor to 100 kΩ, and determine the reverse current through the diode by measuring the voltage across the resistor (use the mV scale on the DMM).

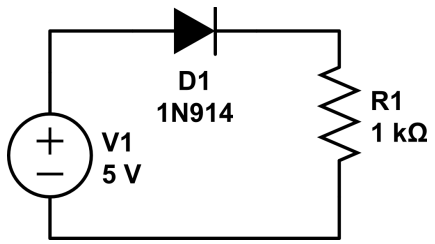

II. Using the center-tapped transformer on the powered breadboard, construct the circuit shown below (this circuit is sometimes called a diode clipper). Using the digital oscilloscope, capture simultaneous measurements of the input and output waveforms. You may use the on-screen measurements and show an image of the trace, or you may save the digital data, analyze the data to extract the salient numbers, and plot the data to make your own image of the scope screen. Can you explain the magnitude and general shape of the output voltage? You may have to use the digital filter and adjust the vertical gain to make the waveform appear larger to get the most accurate measurements. Predict what would happen if a fixed voltage source were placed in series with one or both diodes.

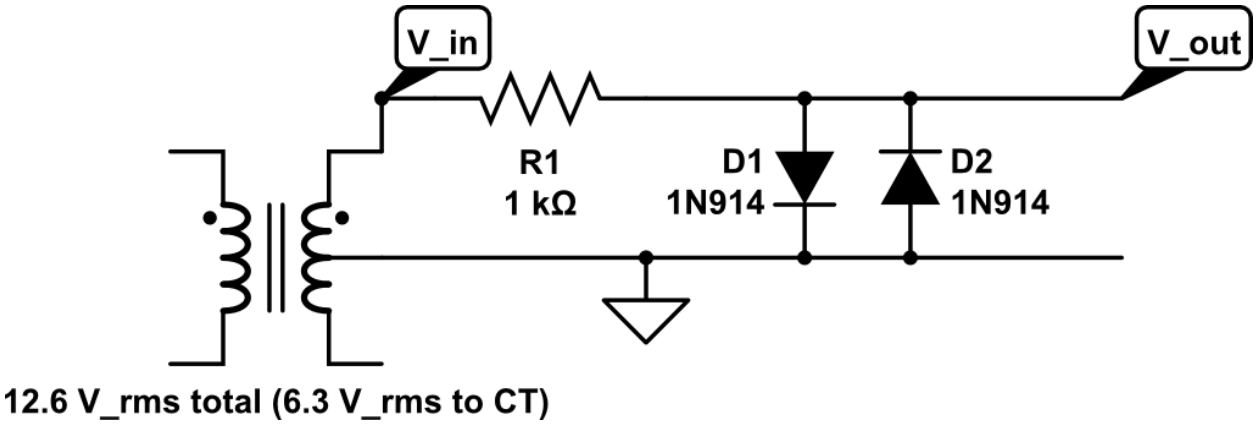

III. Construct the circuit shown below (often called a diode clamp). Collect data sufficient to clearly describe the quantitative relationship between the input and output waveforms.

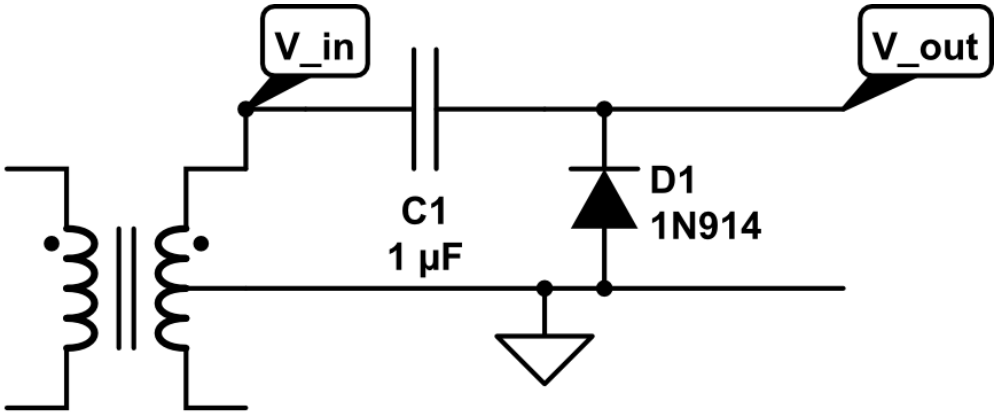

12.6 V_rms total (6.3 V_rms to CT)

IV. Construct the circuit shown below (this one's a full-wave center-tap rectifier, or FWCT). You know the drill by now. CAUTION! You cannot measure the input and output waveforms simultaneously. That would require connecting the probe grounds to points at different potentials. The output waveform should be measured with the probe ground clipped to the indicated ground point. The input waveform has to be measured across the entire secondary of the transformer. Measure them separately!

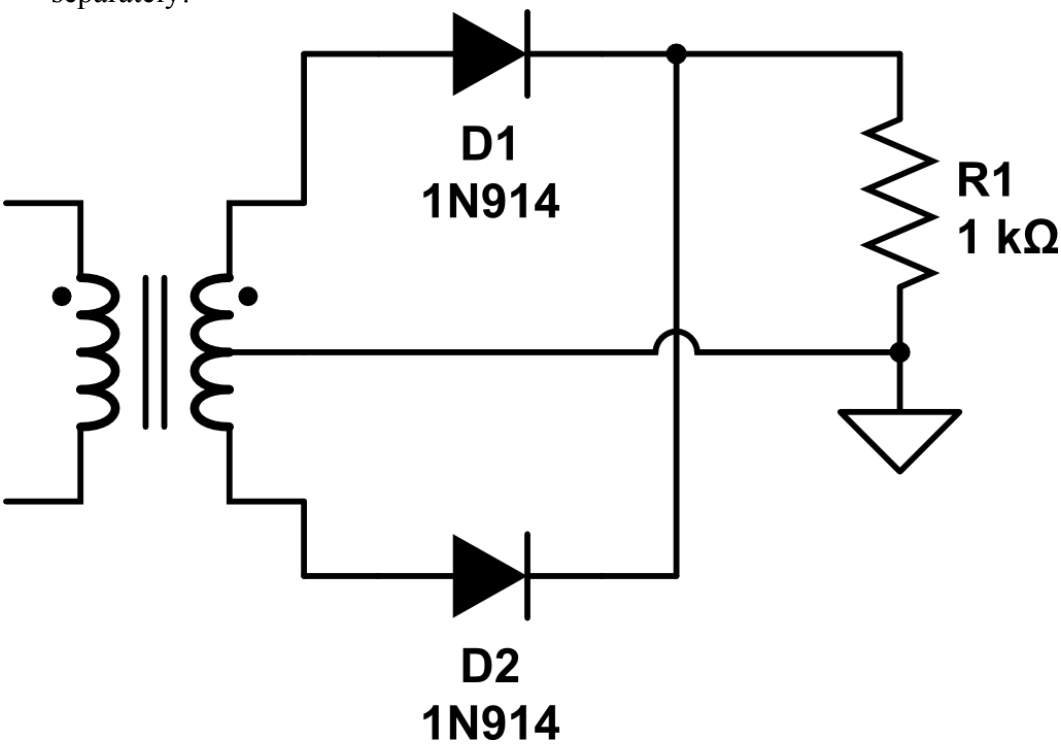

V. Construct the circuit shown below (this one's a full-wave bridge rectifier, or FWB). You know the drill by now. CAUTION! You cannot measure the input and output waveforms simultaneously. That would require connecting the probe grounds to points at different potentials. The output waveform should be measured with the probe ground clipped to the indicated ground point. The input waveform has to be measured from the center tap to the top lead of the transformer secondary. Measure them separately!

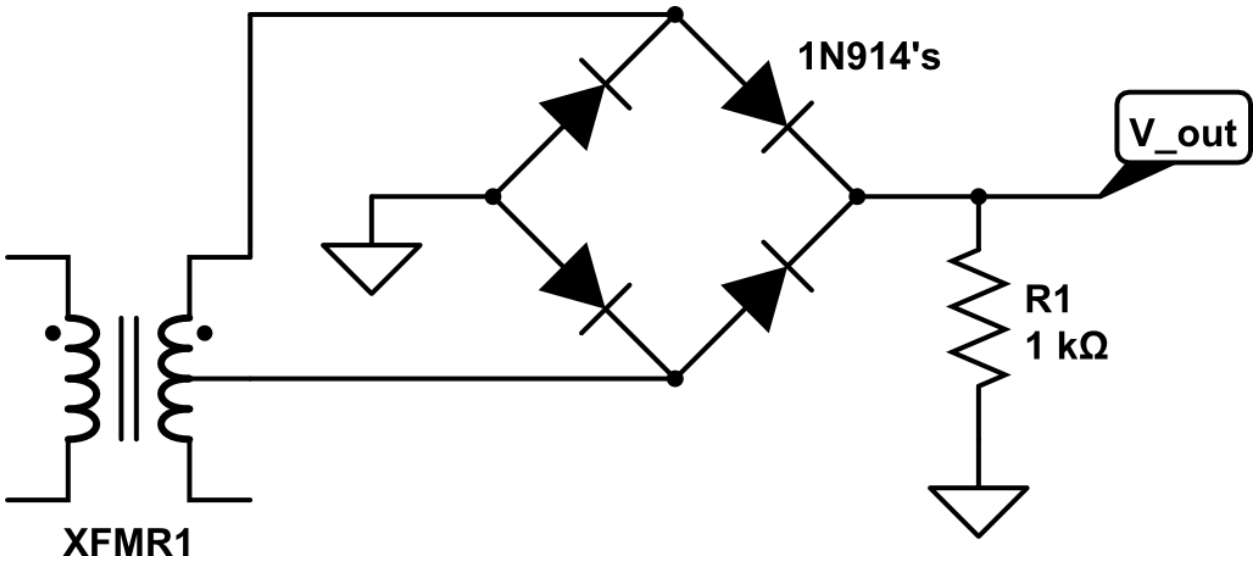

Determine what happens to the output if you put a large electrolytic capacitor in parallel with R1. Measure the output waveform carefully for a 10 µF and 1000 µF (or so) capacitor. Note that these capacitors are polarized, so put them in the right way!

VI. Write a neat report describing your measurements, answering the questions in the instructions, and giving your analysis of the results.