Lab 6 PWM and Transistor Beta

Objectives:

- Use the Arduino's PWM output to generate an analog DC output voltage.
- Use the Arduino to make measurements to allow determination of a transistor's β value.

I. Pulse width modulation (PWM) works by adjusting the duty cycle of a unipolar square wave of constant amplitude and frequency. Since the duty cycle (0 – 100%) is equal to the ratio $\frac{V_{avg}}{V_{p-p}}$, we can take the modulated output, run it through a low-pass filter whose roll-off frequency is substantially below the frequency of the square wave, and produce a DC output that can be controlled by setting the duty cycle of the PWM wave. On our Arduino, the PWM output pins are along the top header, and the square wave is 5 V peak-to-peak and has a frequency near 500 Hz. For example, if we choose pin 2, we adjust the duty cycle in our code by typing:

```
analogWrite(2, 213)
```

where "213" can be any integer between 0 (0% duty cycle, no output) and 255 (100% duty cycle, or a constant 5 V output).

Construct the following circuit on your powered breadboard (no power needed yet) and watch the DC output voltage with your DMM. Based on the component values shown, how long do you have to wait to make sure the output has reached 99% of its final value? This will tell you how long you need to delay in your code after making a change in the duty cycle before making any measurements that depend on that voltage. What is $\omega_{roll-off} = \frac{1}{RC}$ for the resulting low pass filter? What is the voltage gain of the low pass filter at the frequency of the square wave? What should be the resulting ripple amplitude voltage?

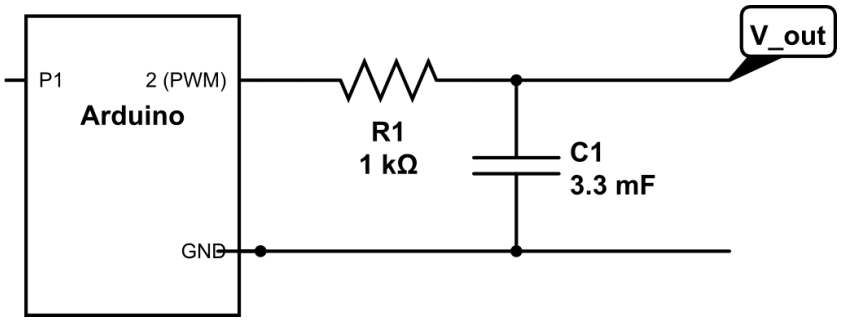

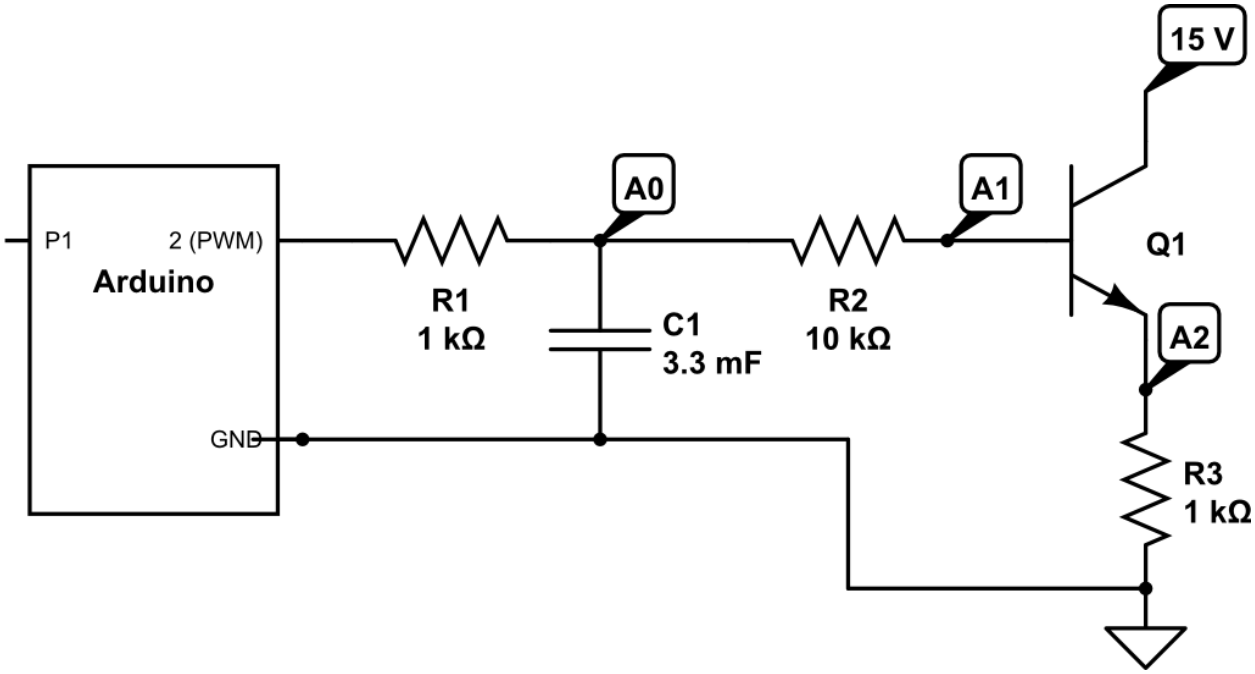

II. Construct the circuit shown above, using either a 2N3904 or 2N4101 transistor. Connect the three points labeled A0, A1, and A2 to the analog input pins (with the same names) on the Arduino. Write an Arduino sketch that will:

a. Output PWM waves that will result in DC voltages at A0 between 0.5 V and 5 V in order to generate about 12 data points.
b. Pause long enough after setting the PWM duty cycle to let the output voltage approach its final value to within less than 1%.
c. Read the voltage via analog input pins A0, A1, and A2.
d. Use the voltages and what you know about transistors to calculate the base current I_b and the collector current I_c, both in mA.
e. Output the data to the serial monitor and pause long enough to copy the data to the clipboard for transfer to a spreadsheet file.

You may then analyze the data to determine the value of β for the transistor.

III. Write a neat report describing your measurements, answering the questions in the instructions, and giving your analysis of the results.