# Lab 9 Operational Amplifiers II

Objectives:

- Build and investigate a Schmitt trigger
- Build and investigate an op-amp differentiator

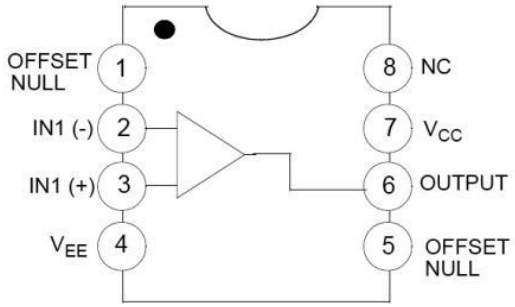


The pinout for the LF411 op-amp is shown above. Recall that $V_{CC}$ is the positive power supply and $V_{EE}$ is the negative power supply.

I. The Schmitt trigger

Connect the circuit shown below using the variable supplies on the PB-505 as $V_{CC}$ (+15 V) and $V_{EE}$ (–15V).

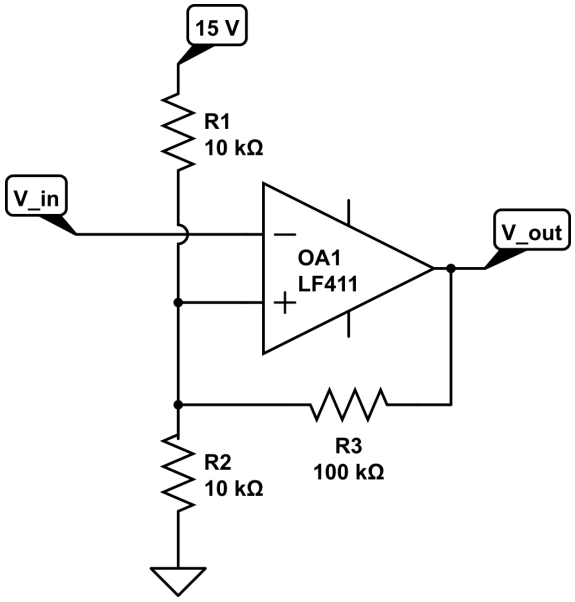


As input, use a sine wave with 20 V p-p and frequency of 1 kHz.

A. Use the cursors on the digital oscilloscope to determine the voltage threshold values at which the output transitions occur. Also measure the output levels, which should be within a volt or two of the power supply rails. Using the resistor values from your

circuit, calculate what the threshold voltage levels should be and compare to your measured values.

B. Increase the input frequency and note how the output of the circuit changes. What property of the op-amp could be causing this change? Do your measured values for the altered output match the value of that property for the LF411?

II. Differentiator (with a twist)

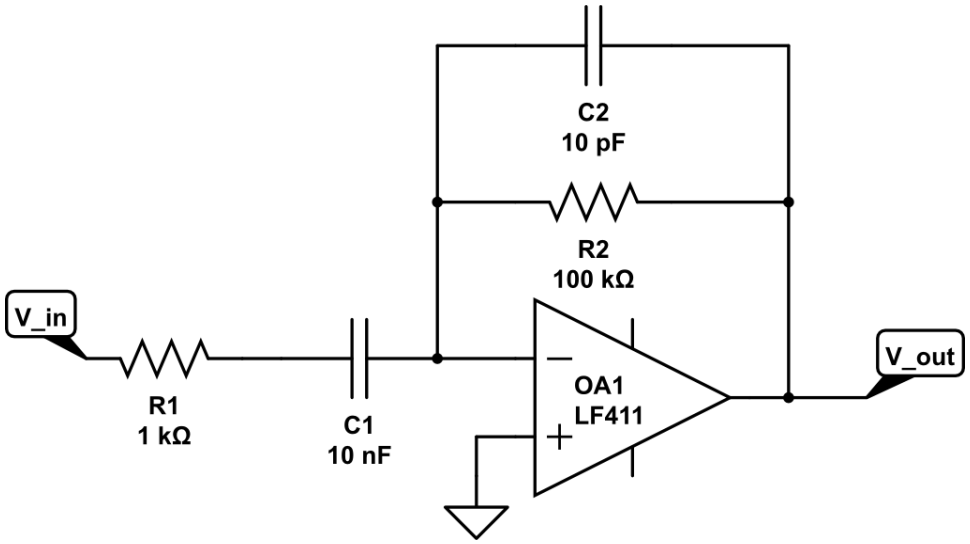


The differentiator circuit we discussed in class (input capacitor with bypass resistor) has some stability problems owing to the op-amp's gain at high frequency. To make it more stable, we've added an input resistor in series with the input capacitor and a small capacitor in parallel with the bypass resistor. Since C2's impedance decreases with increasing frequency, the gain of this inverting amplifier is reduced, ensuring stability. But that also means that our differentiator only works properly at lower frequencies. In fact, we'll see that the nature of this circuit changes substantially at high frequencies.

A. Input a small (0.2 V p-p or so) signal at 1 kHz. Verify that the output really is the derivative (it's an inverter, so the output will be the NEGATIVE derivative) for all three signal types: sine, square, and ramp (or "sawtooth"). Capture the input and output waveforms for your report.

B. Increase the input frequency for all three input signal types to 1 MHz or so. What relationship does the output have to the input now?

III. Write a report describing your activities, your results, and your analysis.